Towards fuzzy logic modelling for CAR T cell function in cancer immunotherapy design

Alice Driessen[1,2,*], Rocío Castellanos Rueda[2], Constance Le Gac[1], Nicolas Deutschman[1], Sai Reddy[2], María Rodríguez Martínez[1]

[1] IBM Research Zürich [2] ETH Zürich *adr@zurich.ibm.com

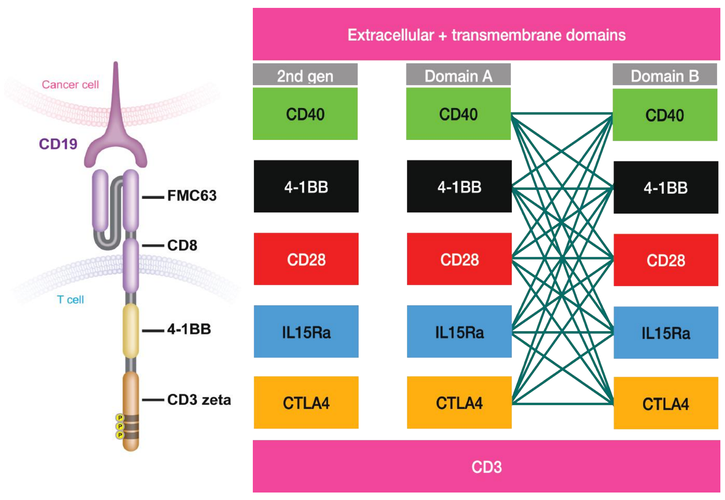

Chimeric Antigen Receptor (CAR) T cell therapy is a promising branch of cancer immunotherapy. CARs are engineered to mimic native T cell activation. The CD3ζ domain mimics T cell receptor signalling and up to three intracellular signalling domains replace co-signalling from cellular receptors. Domains are taken from cytokine receptors or activating and inhibiting co-receptors, causing a plethora of possible CAR designs (>10'000). CAR design determines safety and efficacy of CAR T cell therapy. Testing each CAR design experimentally is intractable. Thus, we propose *in silico* prediction of CAR T cell phenotypes to guide CAR design using fuzzy logic network modelling.

Fig. 1. CAR and library design. Left figure © 2019 Seshu Tyagarajan, Tom Spencer and Jonathan Smith.

Fuzzy logic

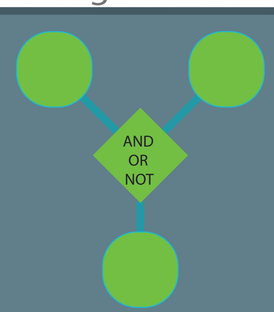

- Network modelling with logical gates
- Hill functions as transfer functions
- Can handle continuous values
- We propose autograd optimisation
- Mean-squared error loss function

Logical gate	Inputs	Transfer function
Activation	x	Hill function $H_{n,K} : x \mapsto \frac{x^n}{x^n + K^n}$
NOT gate	x	$x \mapsto 1 - x$
AND gate	(x,y)	$(x, y) \mapsto x \cdot y$
OR gate	(x,y)	$(x, y) \mapsto (x + y) - x \cdot y$
Mixed gate	(x,y)	$(x, y) \mapsto \alpha \cdot AND(x, y) + (1 - \alpha) \cdot OR(x, y)$

Accurate node value predictions

- Data simulated with another fuzzy logic tool
- Accurate predictions of node values
- PI3K has indegree of 7 leading to less accurate prediction

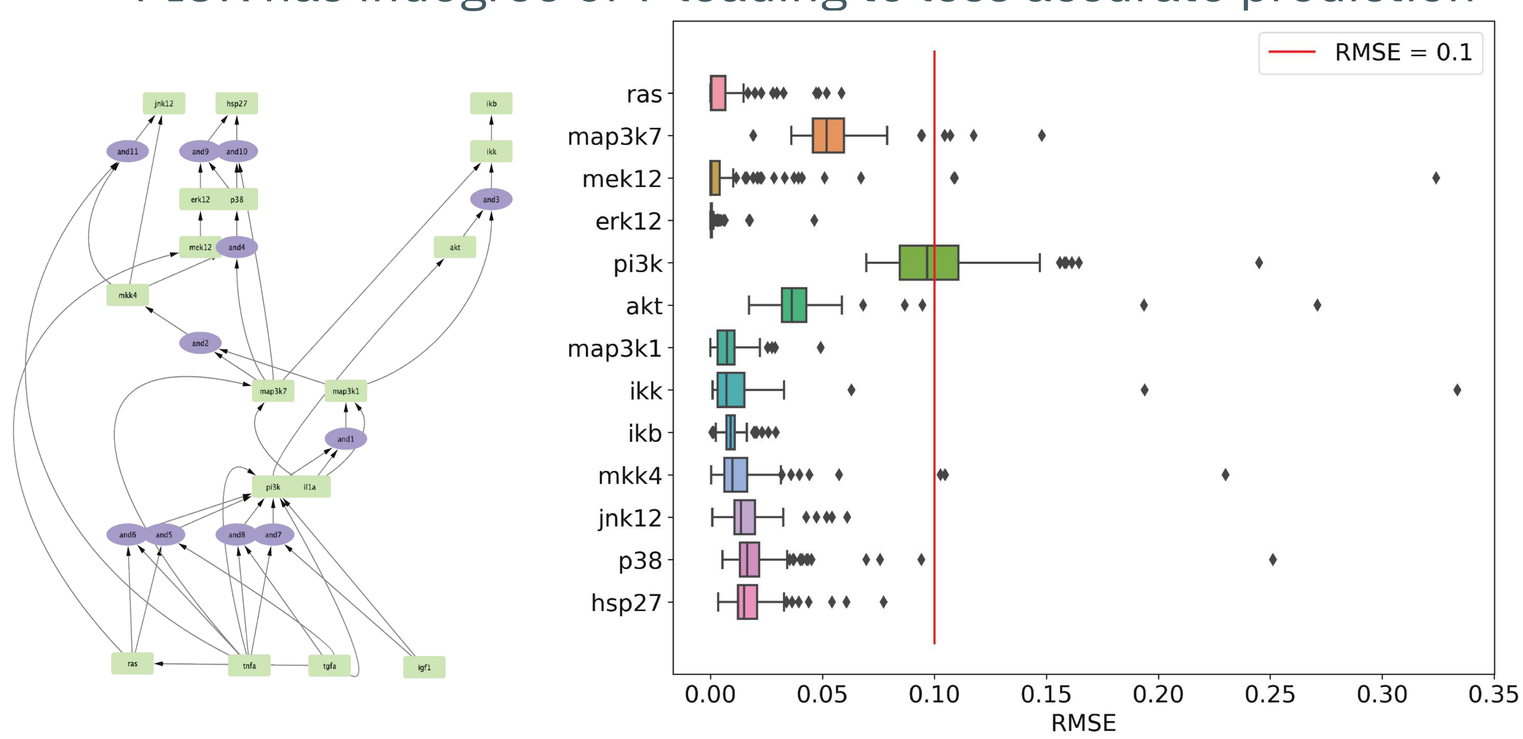

Figure 2 RMSE between model predictions and validation set ground truth on 97 replicates. Data simulated with another fuzzy logic tool using the network shown on the left. The red line indicates a RMSE of 0.1, which was considered as threshold for inaccurate predictions. Nodes are ordered by increasing maximum path length to an input node.

Model feedback loops

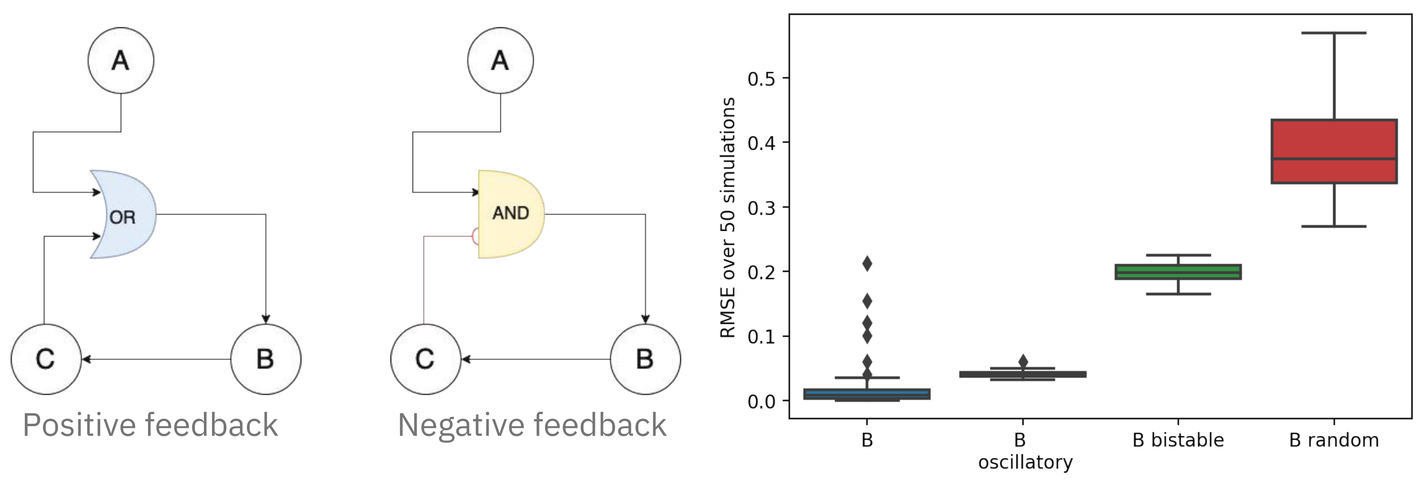

Figure 3 RMSE between model predictions and validation set ground truth on 50 replicates for different loop situations. Data simulated with BioFuzzNet tool using the networks shown on the left. Poitive feedback loop can leed to bistable behaviour (B bistable) and negative feedbackloop to oscillatory behaviour (B oscillatory). Both types can also lead to stable loops (B) and we compare to predictions with random unfitted parameters (B random).

- Simulate positive or negative feedback loops
- Try to predict node behaviour by averaging over last k iterations
- Succesful for stable nodes
- Improvement needed for oscillatory and bistable nodes

Fitting gates and topology

- Learn if interaction is AND or OR

$$Loss = MSE_Loss + \sum_{Mixed_gates} [\alpha_{gate} \cdot (1 - \alpha_{gate})]$$

- Identify wrong edges in simple cases
- accurate node predictions

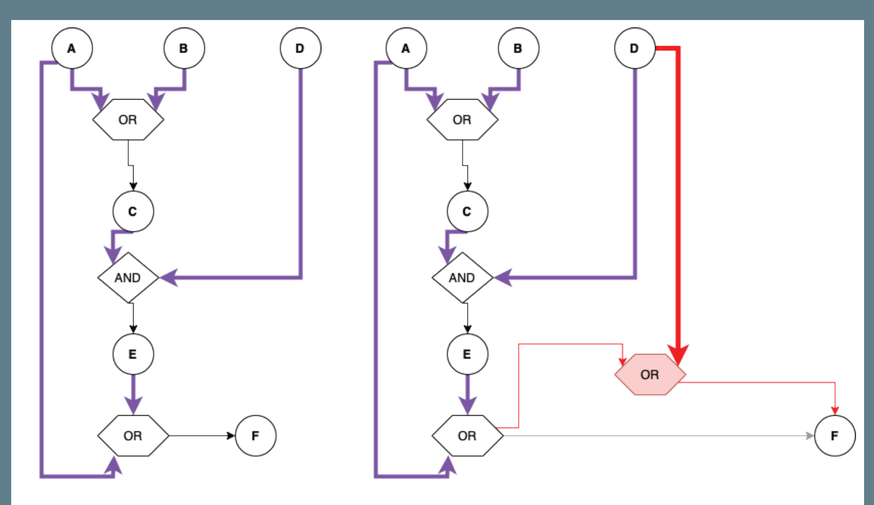

Figure 4 Topologies used to identify incorrect edges. Left topology is used for data simulation, right topology for fitting. During optimization the red edge is correctly inactivated

ETH zürich

IBM Research Europe

This project has received funding from the European Union's Horizon 2020 research and innovation programme under the Marie Skłodowska-Curie grant agreement No.: 955321

Enlightten+